DTI 9021

Cooling Unit 950 - 1250 Btu/h

- Compact design, ideal for flat control cabinets, control consoles and operating units
- Diagnostic message via operating display
- Integrated fault and door contact
- Optionally available with integrated condensate evaporation system

Data		DTI 9021		Unit
Part number	RAL 7035 (Lt. Gray)	13293041055	13293044055	
Rated voltage ± 10 %		230	115[1]	VAC
		AC 50 / 60		Hz
Cooling performance according to EN 14511		950 - 1250		Btu/h
Power consumption		230 / 240	240	W
Nominal (Run) Current		1.6	2.7	A
Starting current		11.7 / 10.9	11.4	A
Unimpeded airflow (free flow)	internal	166 (282)		CFM (m^3/h)
	external			
Fuse (Recommended)		6		A
Type of connection		spring-type terminal included with plug		
Noise level (according to EN ISO 3741)		< 62		dB(A)
Weight (without packaging)		37.5 (17)		lb (kg)
Ambient temperature range		+ 55 … + 15 / + 131 … + 59		°F / °C
Control range (adjustable)		+ 77 … + 113 / + 25 … + 45; factory setting + 95 / + 35		°F / °C
Refrigerant	type	R134a		
	quantity	350		g
Duty cycle		100 %		
Condensate management		Integrated Condensate Management System with Condensate Drain; integrated condensate evaporation system optional		
Protection system according to EN 60529		NEMA Type 12 against enclosure when properly installed		
		NEMA Type 1 towards the surroundings when properly installed		
Design	housing	galvanized sheet steel		
	cover	galvanized/electrostatically powder coated (200 °C); stainless steel on request		

Accessories	Piece	Part number	Information on page
External condensate evaporation system	1	18314000001	94
Condensate bottle	1	18314000100	94

[1] performance data based on 60 Hz operation
Approvals see page 11/12

Cooling Capacity Performance Curve

DTI 9021

How to use chart

Example:
@ 95° F (ambient, X-axis),
@ 95° F (internal, diagonal lines)
= 2320 Btu/h (680 W)
cooling capacity (Y-axis)

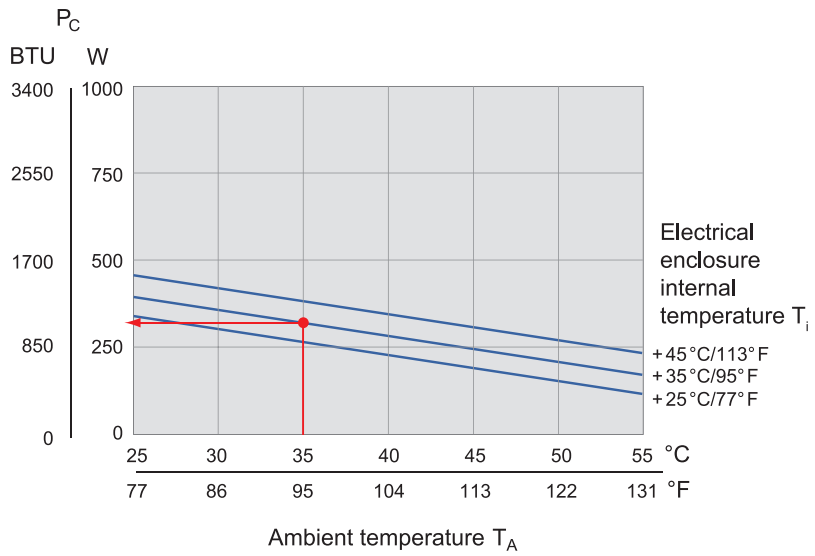

Dimensions

DTI 9021

Dimension	inches (mm)
X	15.16 (385)
Y 115 / 230 V	12.95 (329)
Z1	7.01 (178)
Z2	2.64 (67)
A	11.38 (289)
B	11.97 (304)
C	11.97 (304)
D	8.27 (210)
E	.3 (7.5)

Mounting holes Ø 8 mm and cut-out radii R20

For exact cutout information reference drilling template at pfannenbergusa.com

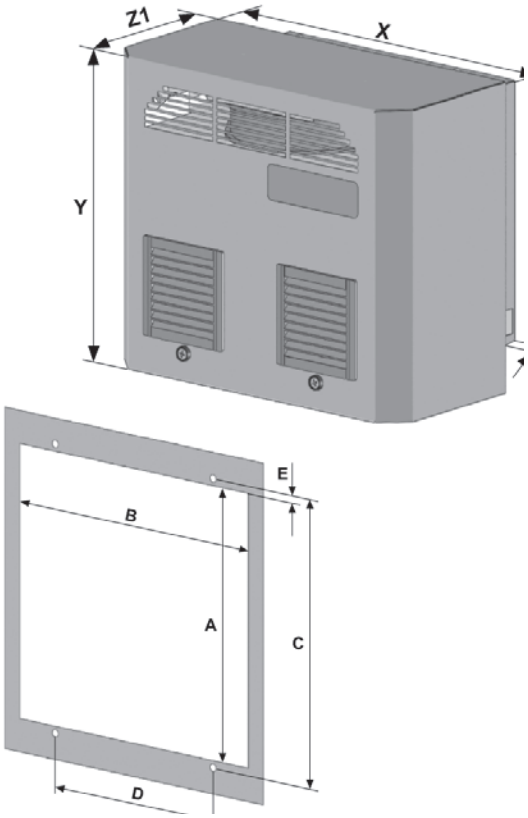

DTI 9031

Cooling Unit 1700 - 2000 Btu/h

DTI: for partially recessed mounting of the cooling unit in the door or side

- Suitable for use with a door width of 400 mm
- Large distance between intake and exhaust vents, safe circulation within the electrical enclosure due to long passage of air, therefore hot spots are eliminated
- Integrated fault and door contact
- DTI variants: fast mounting without drilling and adhering the electrical enclosure seal

Data				Unit
Part number	RAL 7035 (Lt. Gray)	13295041055	13295044055	
Rated voltage ± 10 %		230	115	VAC
		AC 50 / 60		Hz
Cooling performance according to EN 14511		1700 - 2000		Btu/h
Power consumption		283 / 337	322	W
Nominal (Run) Current		1.58 / 1.64	3.29	A
Starting current		14.31 / 13.8	26.15	A
Unimpeded airflow (free flow)	internal	164 (280)		CFM (m^3/h)
	external	203 (345)		CFM (m^3/h)
Fuse (Recommended)		6	10	A
Type of connection		spring-type terminal included with plug		
Noise level (according to EN ISO 3741)		63		dB(A)
Weight (without packaging)	DTI	46 (21)		lb (kg)
Ambient temperature range		+ 55 … + 15 / + 131 … + 59		°F / °C
Control range (adjustable)	SC	+ 77 … + 113 / + 25 … + 45; factory setting + 95 / + 35		°F / °C
Refrigerant	type	R134a		
	quantity	250		g
Duty cycle		100 %		
Condensate management		Integrated Condensate Management System with Condensate Drain		
Protection system according to EN 60529		NEMA Type 12 against enclosure when properly installed		
		NEMA Type 1 towards the surroundings when properly installed		
Design	housing	galvanized sheet steel		
	cover	galvanized/electrostatically powder coated (200 °C); stainless steel on request		

Accessories	Piece	Part number	Information on page
External condensate evaporation system	1	18314000001	94
Condensate bottle	1	18314000100	94

[1] performance data based on 60 Hz operation
Approvals see page 11/12

Cooling Capacity Performance Curve

DTI 9031

How to use chart

Example:
@ 95° F (ambient, X-axis),
@ 95° F (internal, diagonal lines)
= 2320 Btu/h (680 W)
cooling capacity (Y-axis)

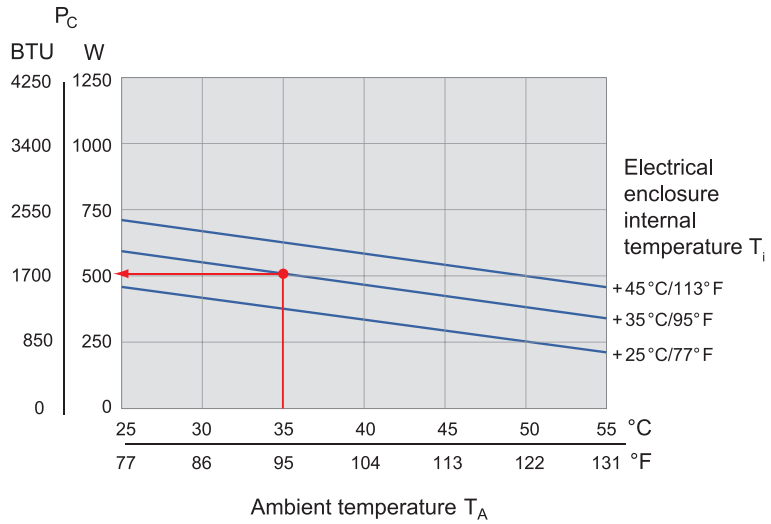

Dimensions

DTI 9031

Dimension	inches (mm)
X	15.16 (385)
Y	22.13 (562)
Z 115 / 230 V	7.01 (178)
K	11.38 (289)
L	11.97 (304)

DTI variants partially recessed by 67 mm after installation

For exact cutout information reference drilling template at pfannenbergusa.com

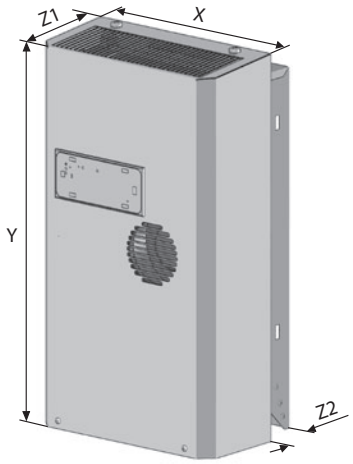

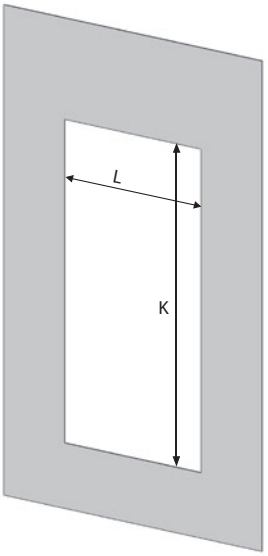

DTI 9241
Cooling Unit 3500 - 5000 Btu/h

DTI 9341
Cooling Unit 5000 - 6000 Btu/h

DTI: for partially recessed mounting of the cooling unit in the door or side

- Integrated Cooling System©: one mounting cut-out for 5 cooling performance ratings, mounted by 1 man in 2 minutes
- Condenser with 3 mm fin spacing, highly effective protection against strongly contaminated ambient air
- Large distance between intake and exhaust vents, safe circulation within the electrical enclosure due to long passage of air, therefore hot spots are eliminated
- Integrated fault and door contact
- Suitable for various supply voltages: 380 V / 400 V / 440 V / 460 V / 480 V
- Optionally available with integrated condensate evaporation system

Data		DTI 9341			DTI 9241		Unit
Part number	RAL 7035 (Lt. Gray)	13269349055	13269341055	13269344055	13269249055	13269241055	
Rated voltage ± 10 %		400/460 1Ø	230	115	400/460 1Ø	230	VAC
		AC 50 / 60					Hz
Cooling performance according to EN 14511		5000 - 6000			3500 - 5000		Btu/h
Power consumption		840 / 1080	800 / 1040	1020 / 1740	780 / 960	740 / 910	W
Nominal (Run) Current		3.0 / 3.6	5.1 / 6.1	10.6 / 13	2.2 / 2.6	3.7 / 4.4	A
Starting current		12.9 / 12.0	21.4 / 19.9	32.2 / 37	6.9 / 11.1	11.5 / 18.5	A
Unimpeded airflow (free flow)	internal	524 (890)					m^3/h (CFM)
	external	524 (890)					m^3/h (CFM)
Fuse (Recommended)		6	16	16	4	16	A
Type of connection		spring-type terminal included with plug					
Noise level (according to EN ISO 3741)		< 62					dB(A)
Weight (without packaging)	DTI	121.25 (55)	110.23 (50)		121.25 (55)	110.23 (50)	lb (kg)
Ambient temperature range		+ 55 … + 15 / + 131 … + 59					°F / °C
Control range (adjustable)	SC	+ 77 … + 113 / + 25 … + 45; factory setting + 95 / + 35					°F / °C
Refrigerant	type	R134a					
	quantity	500					g
Duty cycle		100 %					
Condensate management		Integrated Condensate Management System with Condensate Drain; integrated condensate evaporation system optional					
Protection system according to EN 60529		NEMA Type 12 against enclosure when properly installed					
		NEMA Type 1 towards the surroundings when properly installed					
Design	housing	galvanized sheet steel					
	cover	galvanized/electrostatically powder coated (392 °F / 200 °C); stainless steel on request					

Accessories	Piece	Part number	Information on page
External condensate evaporation system	1	18314000001	94
Condensate bottle	1	18314000100	94
Pre-filter, aluminum	1	18329241010	94

Approvals see page 11/12

Pfannenberg
ELECTRO-TECHNOLOGY FOR INDUSTRY

Cooling Capacity Performance Curve

DTI 9341

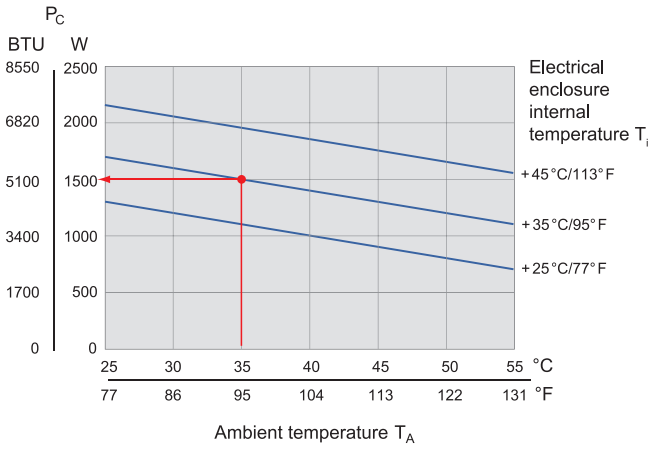

DTI 9241

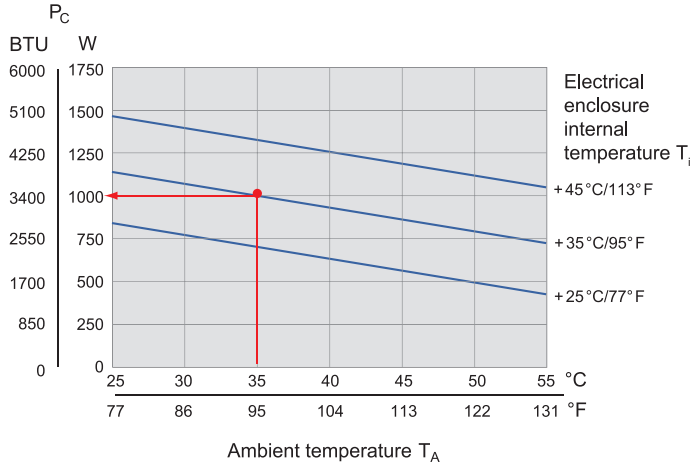

How to use chart

Example:
@ 95° F (ambient, X-axis), @ 95° F (internal, diagonal lines)

Dimensions

DTI 9341/9241

Dimension	inches (mm)
X	19.09 (485)
Y	60.47 (1536)
Z	7.09 (180)
K	59.45 (1510)
L	17.72 (450)

DTI variants partially recessed by 2.36" (60 mm) after installation

For exact cutout information reference drilling template at pfannenbergusa.com

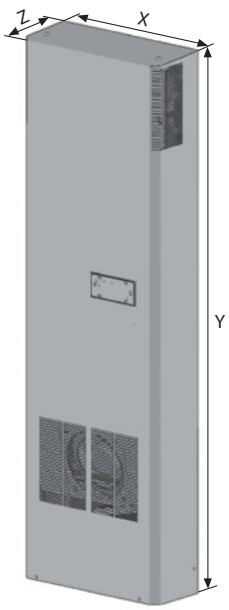

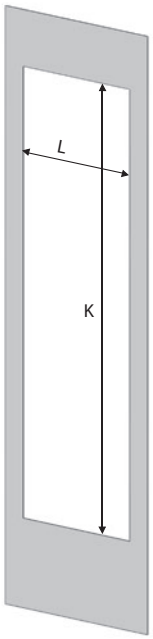

DTI 9441

Cooling Unit 7000 - 9000 Btu/h

DTI 9541

Cooling Unit 9000 - 11000 Btu/h

DTI: for partially recessed mounting of the cooling unit in the door or side

- Integrated Cooling System©: one mounting cut-out for 5 cooling performance ratings, mounted by 1 man in 2 minutes
- Condenser with 3 mm fin spacing, highly effective protection against strongly contaminated ambient air
- Large distance between intake and exhaust vents, safe circulation within the electrical enclosure due to long passage of air, therefore hot spots are eliminated
- Integrated fault and door contact
- Suitable for various supply voltages: 380 V / 400 V / 440 V / 460 V / 480 V
- Optionally available with integrated condensate evaporation system

Data		DTI 9541	DTI 9441	Unit
Part number	RAL 7035 (Lt. Gray)	13269532055	13269432055	
Rated voltage ± 10 %		400 / 460 3Ø	400 / 460 3Ø	VAC
		AC 50 / 60		Hz
Cooling performance according to EN 14511		9000 - 11000	7000 - 9000	Btu/h
Power consumption		1140 / 1450	880 / 1250	W
Nominal (Run) Current		3.5 / 3.9	3.2 / 3.7	A
Starting current		10.9 / 11.8	10.5 / 11.2	
Unimpeded airflow (free flow)	internal	524 (890)		CFM (m^3/h)
	external	706 (1200)		
Fuse (Recommended)		16		A
Type of connection		spring-type terminal included with plug		
Noise level (according to EN ISO 3741)		< 65		dB(A)
Weight (without packaging)	DTI	148 (67)		lb (kg)
Ambient temperature range		+ 55 … + 15 / + 131 … + 59		°F / °C
Control range (adjustable)	SC	+ 77 … + 113 / + 25 … + 45; factory setting + 95 / + 35		
Refrigerant	type	R134a		
	quantity	1000		g
Duty cycle		100 %		
Condensate management		Integrated Condensate Management System with Condensate Drain; integrated condensate evaporation system optional		
Protection system according to EN 60529		NEMA Type 12 against enclosure when properly installed		
		NEMA Type 1 towards the surroundings when properly installed		
Design	housing	galvanized sheet steel		
	cover	galvanized/electrostatically powder coated (200 °C); stainless steel on request		

Accessories	Piece	Part number	Information on page
External condensate evaporation system	1	18314000001	94
Condensate bottle	1	18314000100	94
Pre-filter, aluminum	1	18329241010	94

Approvals see page 11/12

Pfannenberg
ELECTRO-TECHNOLOGY FOR INDUSTRY

Cooling Capacity Performance Curve

DTI 9541

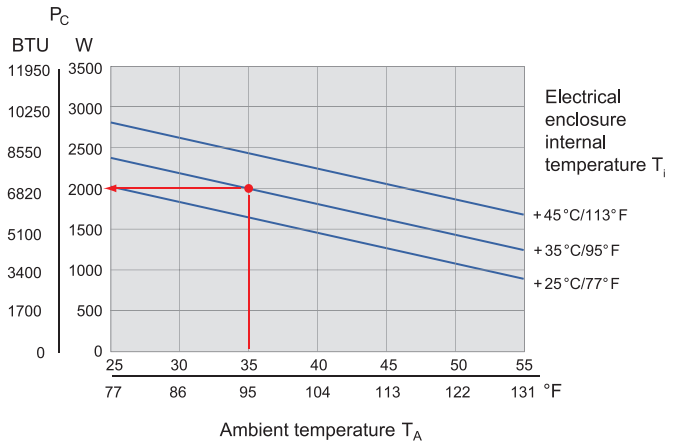

DTI9441

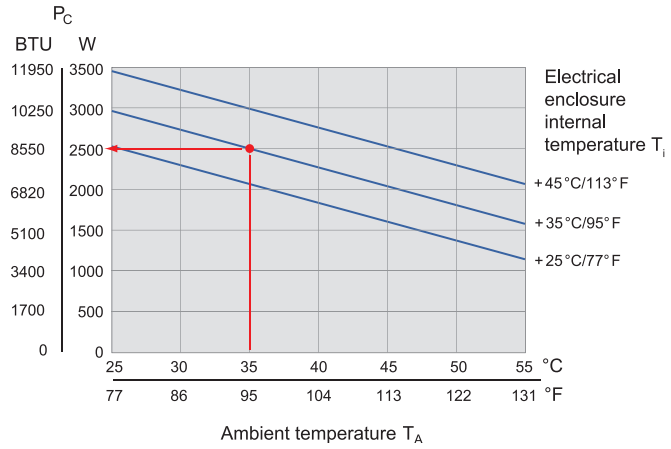

How to use chart

Example:
@ 95° F (ambient, X-axis), @ 95° F (internal, diagonal lines)
= 2320 Btu/h (680 W) cooling capacity (Y-axis)

Dimensions

DTI 9541 / 9441

Dimension	inches (mm)
X	19.09 (485)
Y	60.47 (1536)
Z	7.09 (180)
K	59.45 (1510)
L	17.72 (450)

DTI variants partially recessed by 4.72" (120 mm) after installation

For exact cutout information reference drilling template at pfannenbergusa.com

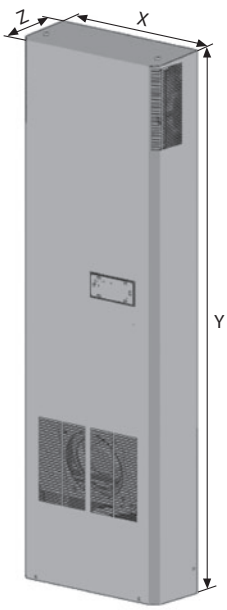

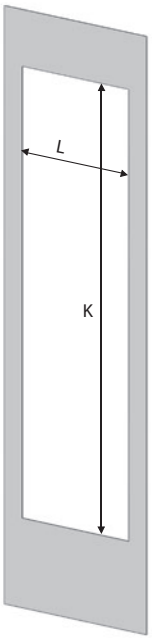

DTI 9841

Cooling Unit 13000 - 16000 Btu/h

DTI: for partially recessed mounting of the cooling unit in the door or side

- Integrated Cooling System©: one mounting cut-out for 5 cooling performance ratings, mounted by 1 man in 2 minutes
- Condenser with 3 mm fin spacing, highly effective protection against strongly contaminated ambient air
- Large distance between intake and exhaust vents, safe circulation within the electrical enclosure due to long passage of air, therefore hot spots are eliminated
- Integrated fault and door contact
- Suitable for various supply voltages: 380 V / 400 V / 440 V / 460 V / 480 V
- Optionally available with integrated condensate evaporation system

Data		DTI 9841	Unit
Part number	RAL 7035 (Lt. Gray)	13269832055	
Rated voltage ± 10 %		400 / 460 3Ø	VAC
		AC 50 / 60	Hz
Cooling performance according to EN 14511		13000 - 16000	Btu/h
Power consumption		1891 / 2336	W
Nominal (Run) Current		4.2 / 3.6	A
Starting current		28.3 / 25.2	A
Unimpeded airflow (free flow)	internal	983 (1670)	CFM (m^3/h)
	external	824 (1400)	CFM (m^3/h)
Fuse (Recommended)		16	A
Type of connection		spring-type terminal included with plug	
Noise level (according to EN ISO 3741)		<70	dB(A)
Weight (without packaging)	DTI	190 (86)	lb (kg)
Ambient temperature range		+ 55 … + 15 / + 131 … + 59	°F / °C
Control range (adjustable)	SC	+ 77 … + 113 / + 25 … + 45; factory setting + 95 / + 35	°F / °C
Refrigerant	type	R134a	
	quantity	2100	g
Duty cycle		100 %	
Condensate management		Integrated Condensate Management System with Condensate Drain; integrated condensate evaporation system optional	
Protection system according to EN 60529		NEMA Type 12 against enclosure when properly installed	
		NEMA Type 1 towards the surroundings when properly installed	
Design	housing	galvanized sheet steel	
	cover	galvanized/electrostatically powder coated (200 °C); stainless steel on request	

Accessories	Piece	Part number	Information on page
External condensate evaporation system	1	18314000001	94
Condensate bottle	1	18314000100	94
Pre-filter, aluminum	1	18329241010	94

Approvals see page 11/12

Cooling Capacity Performance Curve

DTI 9841

How to use chart

Example:
@ 95° F (ambient, X-axis),
@ 95° F (internal, diagonal lines)
= 2320 Btu/h (680 W)
cooling capacity (Y-axis)

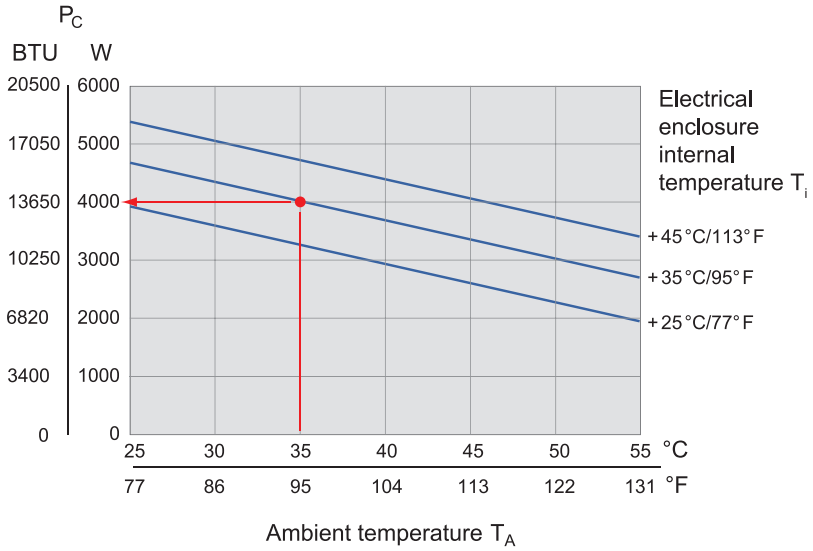

Dimensions

DTI 9841

Dimension	inches (mm)
X	19.09 (485)
Y	60.98 (1549)
Z	14.17 (360)
K	59.45 (1510)
L	17.72 (450)

DTI variants partially recessed by 4.72" (120 mm) after installation

For exact cutout information reference drilling template at pfannenbergusa.com

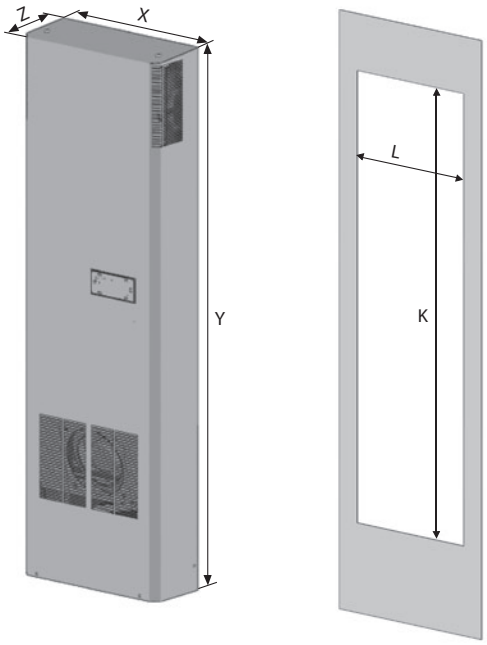

PTM 100
PTM 150

Peltier Cooling Units
100–150 W

Peltier cooling unit product line for use in sensitive areas, circuitry and small control cabinets.

- Ideal for the cooling of operating and control elements
- Particularly suitable for support arm systems
- Vibration-free, also usable for precision processes
- Pinpoint cooling of hotspots

Data		PTM 100	PTM 150	Unit
Part number	horizontal RAL 7035 (Lt. Gray)	15310080055	15315080055	
	vertical RAL 7035 (Lt. Gray)	15310180055	15315180055	
Rated voltage ± 10 %		24 DC	24 DC	V
Cooling performance according to EN 14511		100	150	W
Power consumption		102	240	
Nominal (Run) Current		4.25	10	A
Unimpeded airflow (free flow)	internal	45 (76)	67 (114)	CFM (m^3/h)
	external	99 (156)	138 (234)	
Fuse (Recommended)		6	16	A
Type of connection	DC	connection via terminal strip, max. 2.5 mm^2 / AWG 16		
	AC	main plug		
Sensor cable length		1200		mm
Noise level (according to EN ISO 3741)		47		dB(A)
Weight (without packaging)		15 (7)	20 (9)	lb (kg)
Ambient temperature range		- 40 … + 50 / - 40 … + 122		°F / °C
Control range (adjustable)		+ 0 … + 50 / + 32 … + 122		
Duty cycle		100 %		
Condensate management		Integrated Condensate Management System with Condensate Drain		
Protection system according to EN 60529		NEMA Type 12 against enclosure when properly installed		
		NEMA Type 1 towards the surroundings when properly installed		
Design	housing	galvanized sheet steel		
	cover	galvanized/electrostatically powder coated (200 °C)		
Installation location		H - horizontal / V - vertical		

Accessories	Piece	Part number	Information on page
External condensate evaporation system	1	18314000001	94
Condensate bottle	1	18314000100	94

Approvals see page 11/12

Pfannenberg
ELECTRO-TECHNOLOGY FOR INDUSTRY

Cooling Capacity Performance Curve

PTM 100

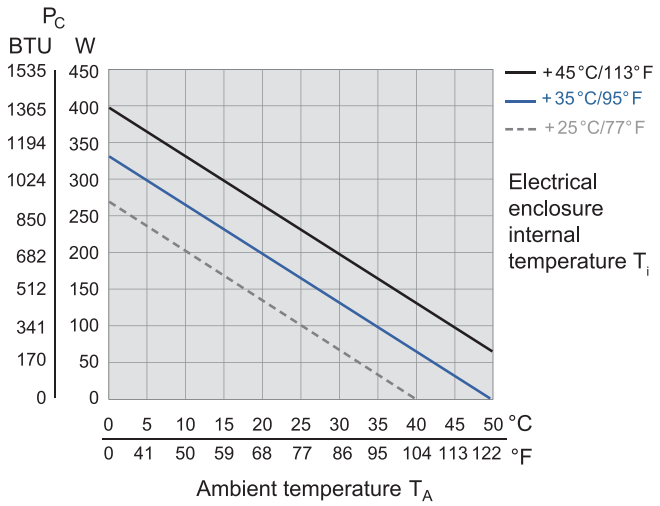

PTM 150

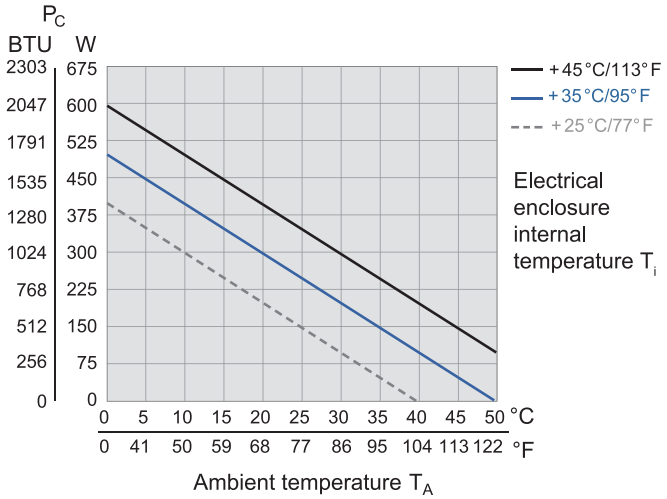

Dimensions

Dimension	PTM 100	PTM 150
	inches (mm)	
X	7.13 (181)	7.13 (181)
Y	14.45 (367)	19.49 (495)
Z1	5.94 (151)	5.94 (151)
Z2	2.95 (75)	2.95 (75)

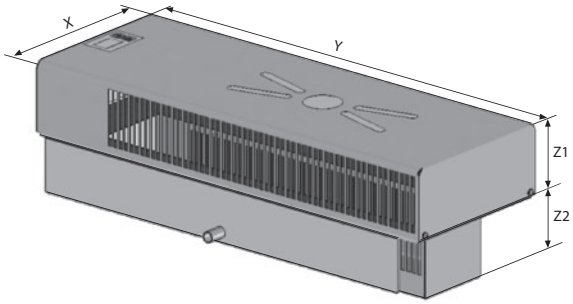

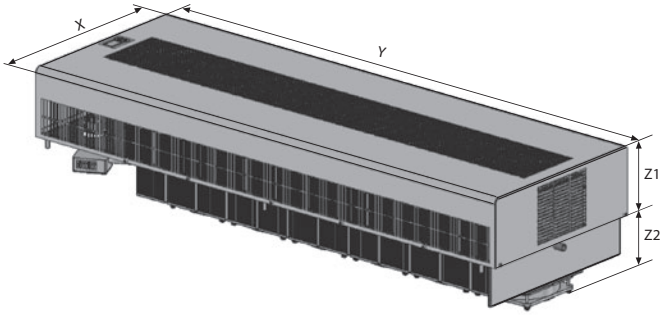

Other products and literature available from Pfannenberg...

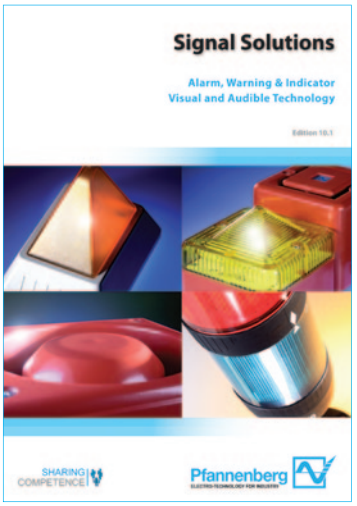

Signal Solutions Guide

Global Service Guide

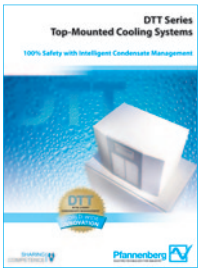

DTT Series Cooling Units

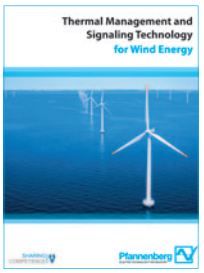

Wind Energy Solutions Guide

Food & Beverage Thermal Management Solutions

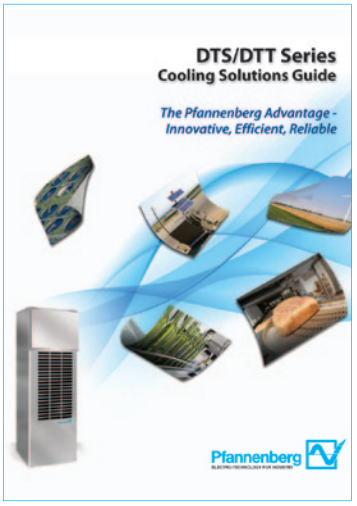

Cooling Solutions Guide

Pfannenberg
ELECTRO-TECHNOLOGY FOR INDUSTRY

Pfannenberg Incorporated
68 Ward Road
Lancaster, New York 14086 USA
Phone: 716-685-6866
Fax: 716-681-1521

info@pfannenbergusa.com
www.pfannenbergusa.com

8 7 5 0 0 0 0 0 3

Subject to technical amendments and misprints.